ALLURE PROJECT
INDUCTION HOB WITH INTEGRATED HOOD
DPI7888BH

De Dietrich

ABOUT ALLURE

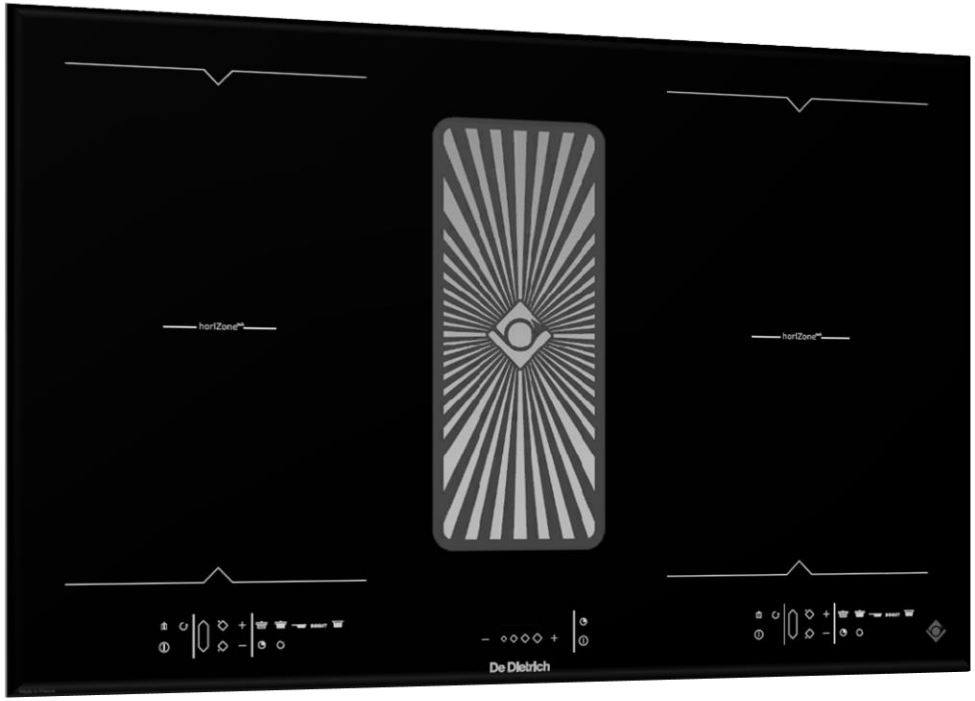

This **2 in 1** hob has **2 Horizone multizones** ensuring flexibility and allowing the use of large utensils and equipped with **4 booster** which offer a very high power going up to **3700 W** very quickly.

This hob incorporates between **its 2 HoriZones,** a central **downdraft hood** covered with a wonderful **De Dietrich hunting horn grid fully integrated.**

Benefit from a **suction power of 700 m3/h and 62 db** allowing you to adapt the suction intensity to your needs **and 20 levels of cooking power** to perfectly control the cooking of your dishes, all with low **A + consumption**

2 products in one, allowing you to enjoy the moments spent cooking

ALLURE PROJECT
INDUCTION HOB WITH INTEGRATED HOOD
DPI7888BH

De Dietrich

Induction Hob

- 80cm
- 4 zone (2 x HoriZones)
- Intelligent touch control with digit display
- 19 power levels
- Booster
- 4 x independent timers
- Quick Access functions:
  - ❖ Keep warm, Simmer
  - ❖ Sear
- Elapsed timer / Recall function / Boil function
- horiZone tech:
  - ❖ Cooking can be divided into two independent zones to cook either at the back, or at the front, or on both simultaneously, by setting the power levels appropriate to each zone.
- 10 safety features:
  - ❖ Residual heat indicator
  - ❖ Small object safety
  - ❖ Anti overflow
  - ❖ Autostop® system
  - ❖ Keypad lock
  - ❖ Automatic saucepan detection
  - ❖ Temperature limiter
  - ❖ Low voltage, Connection error, Over Tension

Cooking Zones	#1 + #2	#3 + #4
Position of zone	Left	Right
Size of zone (mm)	HoriZonetech 400x230	HoriZonetech 400x230
Power (W)	3800	3800

ALLURE PROJECT
INDUCTION HOB WITH INTEGRATED HOOD
DPI7888BH

De Dietrich

Induction Hob Electrical Connections

- Maximum electrical power (W): 7400
- Current(Amp): 32
- Voltage(V): 220 - 240
- Frequency(Hz): 50 / 60
- Length of electrical supply cord(cm): 130
- Type of plug: Without

Dimensions for Induction hob:

- Dimension of product(mm): W800 x D515
- Built In dimension(mm): W745 x D490
- Fully flushed dimensions(mm): W803 x D518
- Recessed height for fully flushed installation (mm): 5
- Net weight(kg): 18
- Gross weight(kg): 20

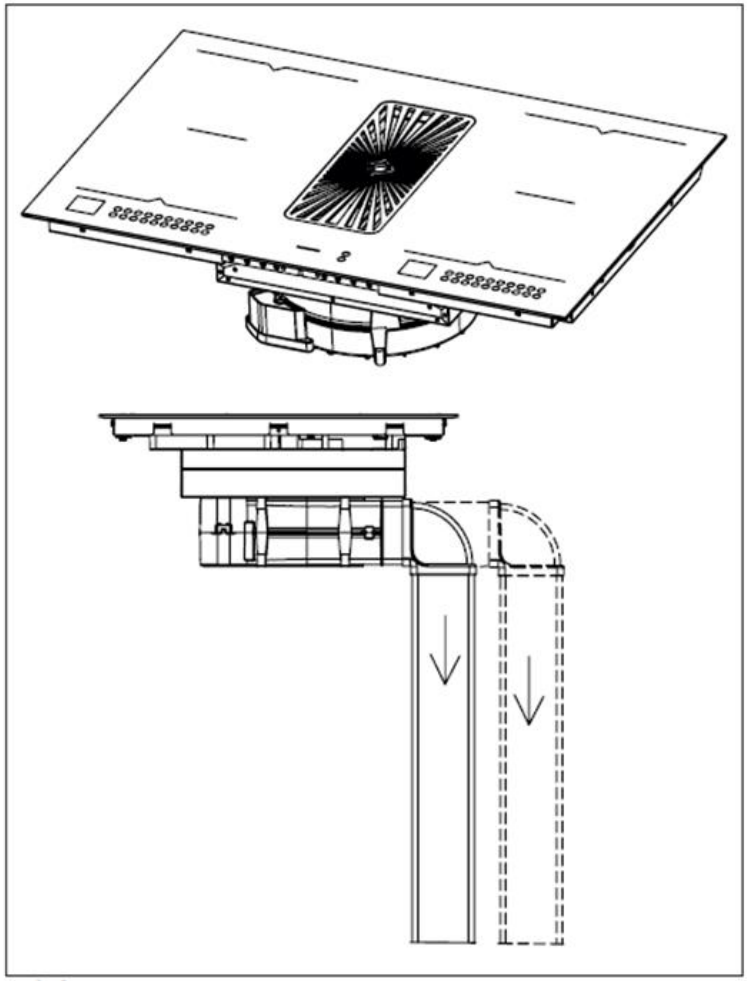

EOLE PROJECT
INDUCTION HOB WITH INTEGRATED HOOD
DPI7888BH

De Dietrich

Installation Diagram – Induction hob

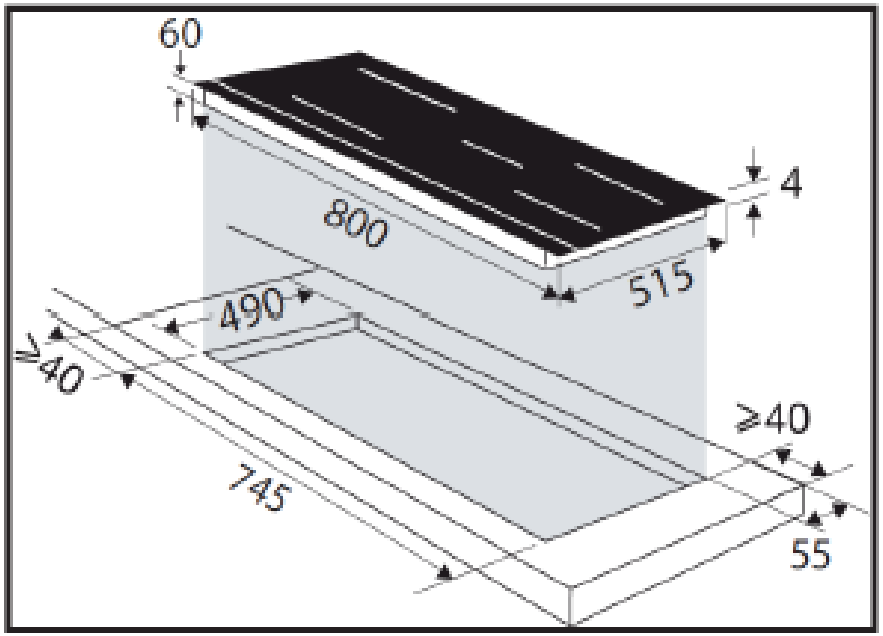

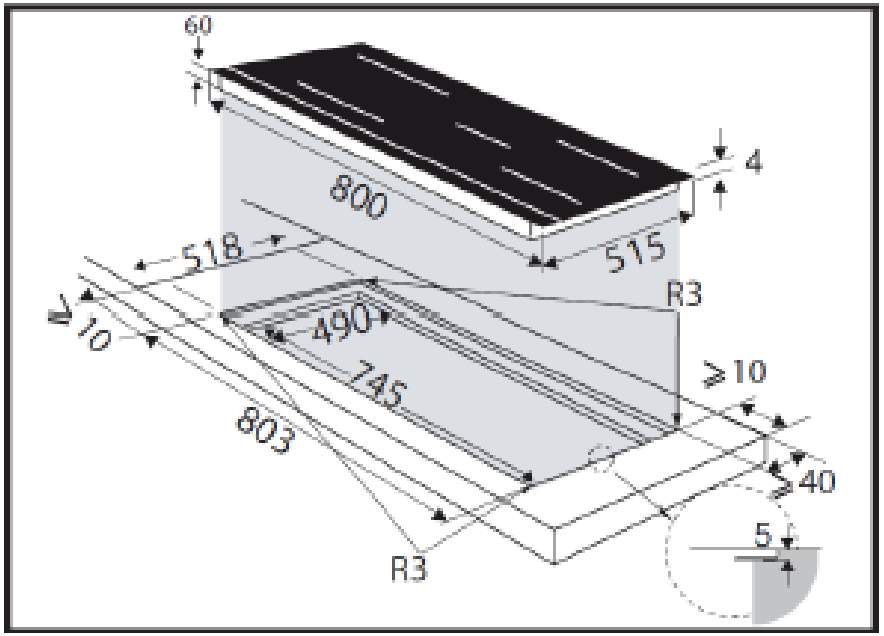

ALLURE PROJECT
INDUCTION HOB WITH INTEGRATED HOOD
DPI7888BH

De Dietrich

Integrated Hood

- 52cm
- Cast iron ventilation grid
- Intelligent touch control
- 4 speeds
- 700m3/h
- 57dBA (booster mode)
- Delay stop function
- Delivered in recycling mode
- 2 x aluminum filters
- 2 x carbon filter

Electrical Connections

- Maximum electrical power (W): 220
- Current(Amp): 10
- Voltage(V): 220 - 240
- Frequency(Hz): 50 / 60
- Length of electrical supply cord(cm): 200
- Type of plug: Without

Dimensions

- Dimension of product(mm): H215 x W370 x D520
- Net weight(kg): 26
- Gross weight(kg): 32

ALLURE PROJECT
INDUCTION HOB WITH INTEGRATED HOOD
DPI7888BH

De Dietrich

Installation Diagram

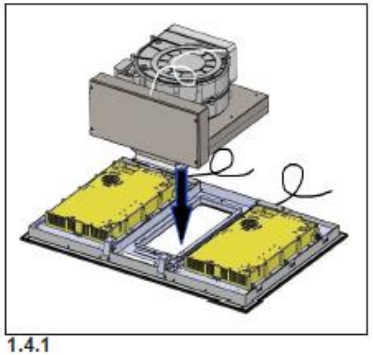
1.4.1

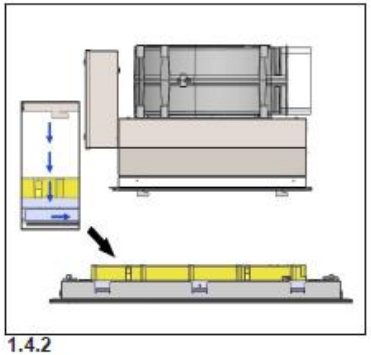
1.4.2

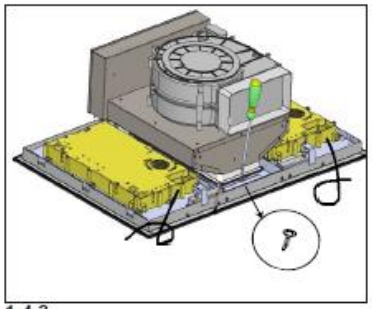
1.4.3

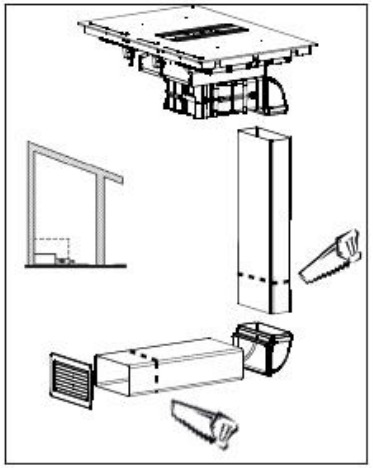
1.4.4

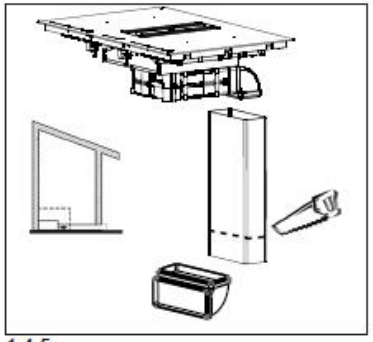
1.4.5

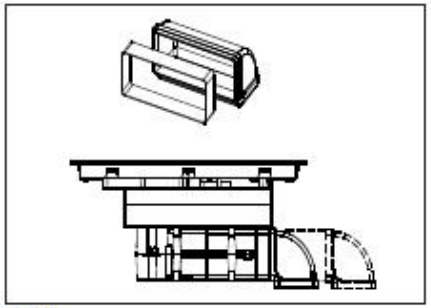
1.4.6

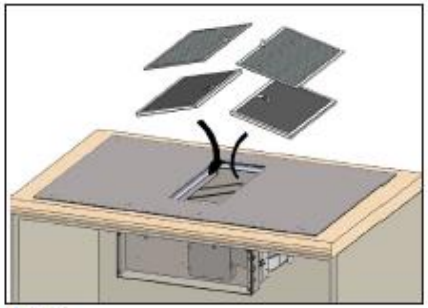
1.4.7

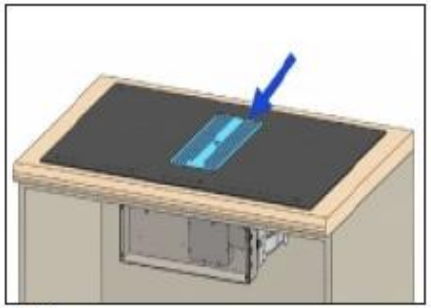
1.4.8

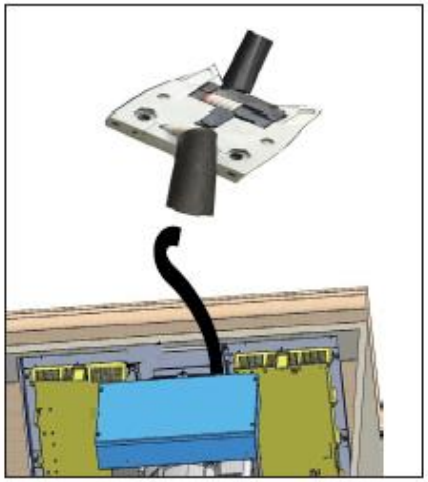
1.4.9